Schemat blokowy

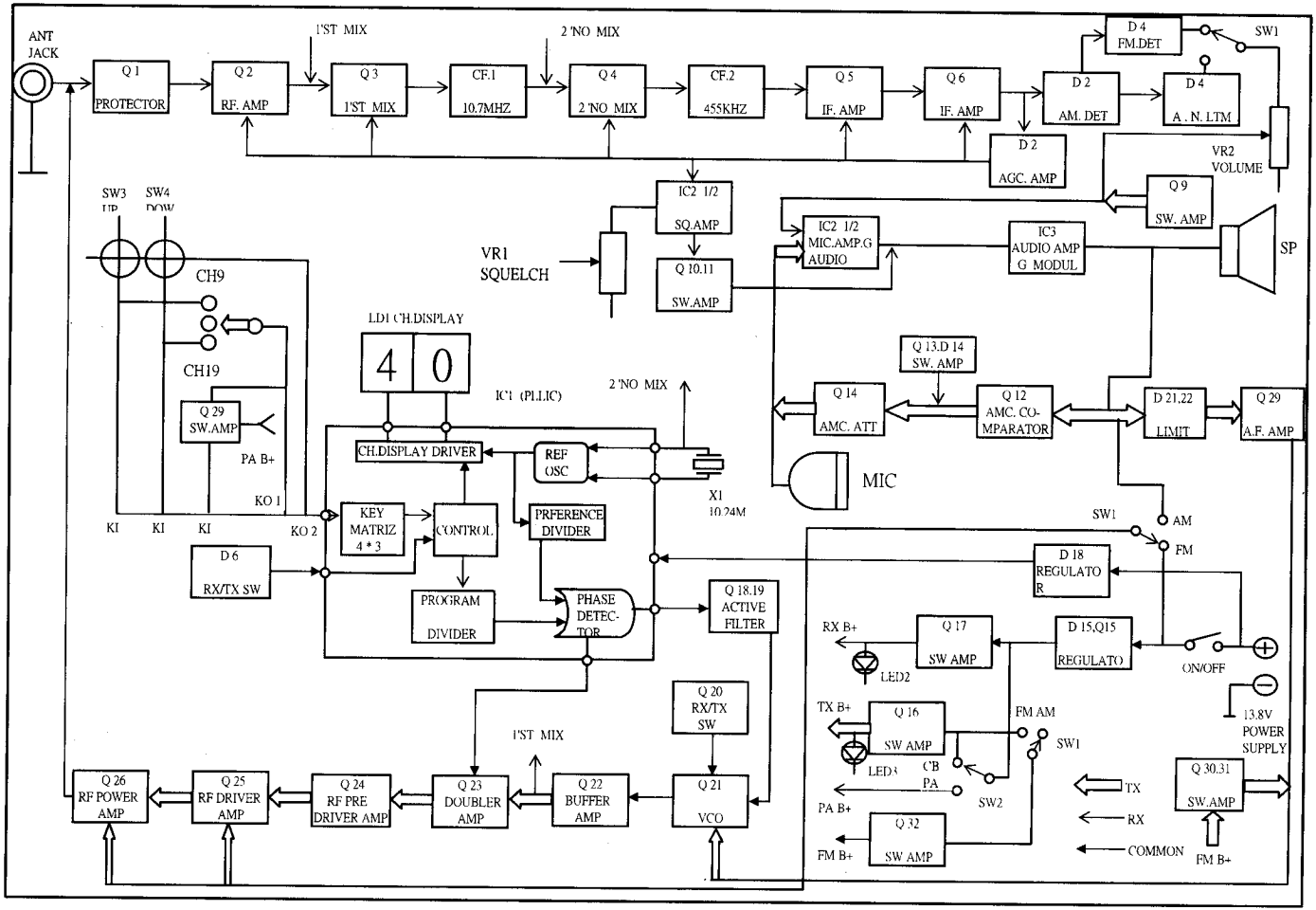

Plytka drukowana

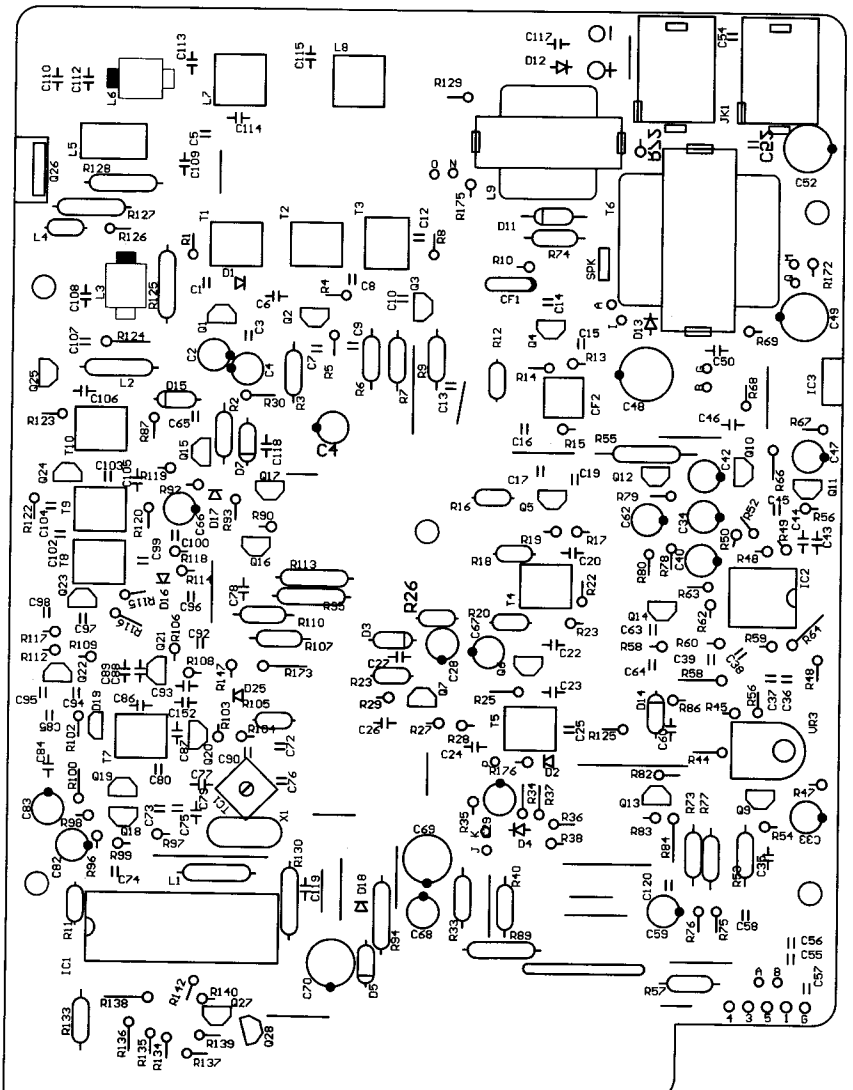

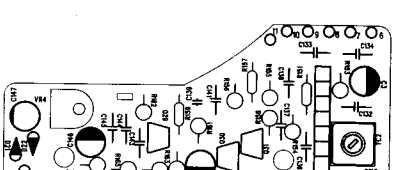

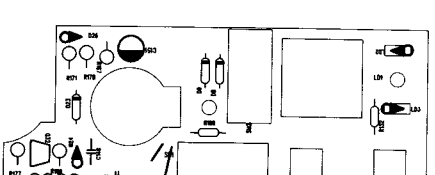

Schemat ideowy

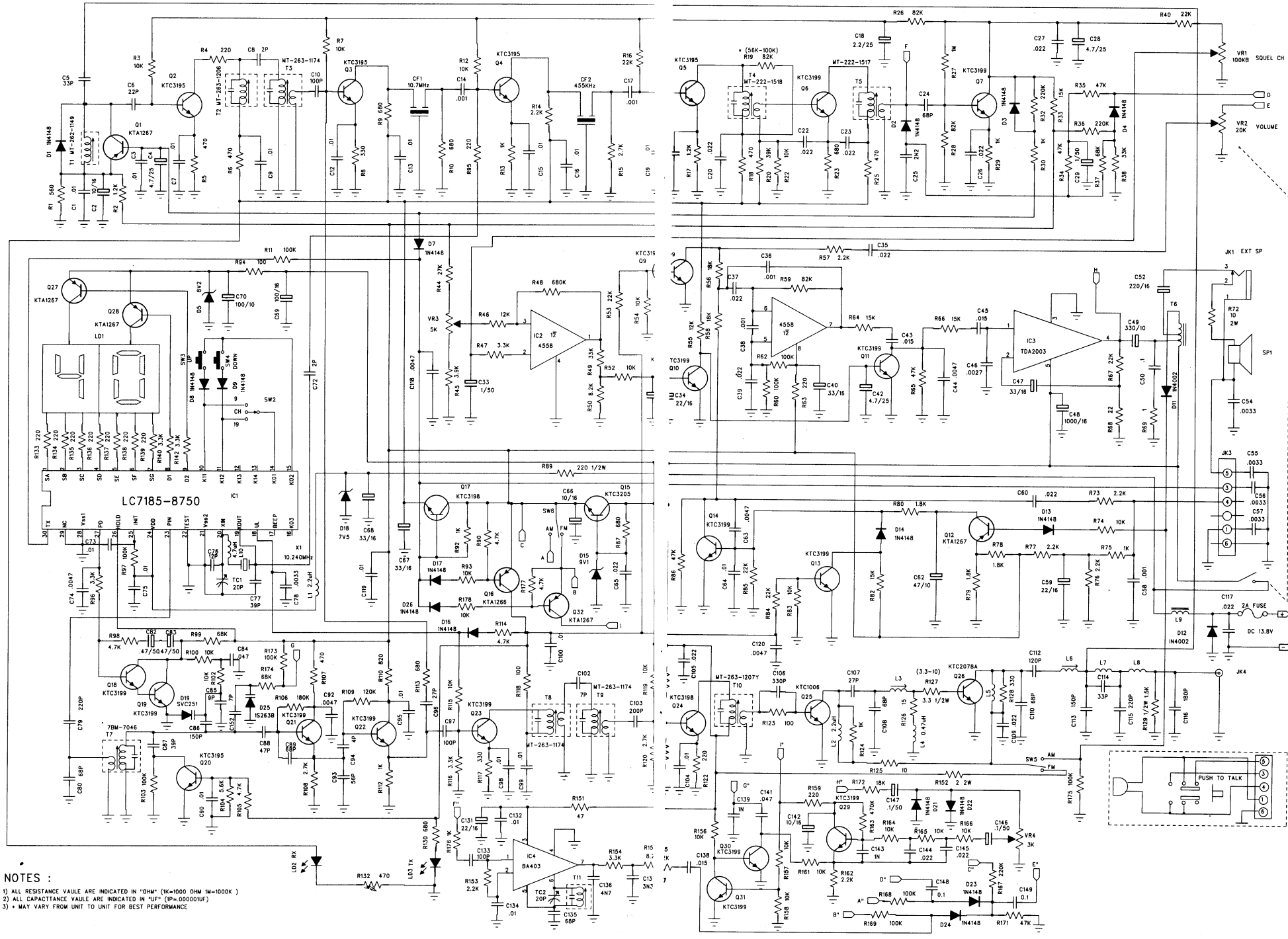

NOTES :

1) ALL RESISTANCE VAULE ARE INDICATED IN "OHM" (1K=1000 OHM 1M=1000K)
2) ALL CAPACTTANCE VAULE ARE INDICATED IN "UF" (1P=.000001UF)
3) + MAY VARY FROM UNIT TO UNIT FOR BEST PERFORMANCE